DHI-LPH86-MT410-B-S2

86 inch

Functions

4K HD Display
With up to 3840 × 2160 resolution, the 4K HD display delivers a clear image in sharp, vivid colors.

AI Recognition of Drawings
Identifies hand-drawn structures such as straight lines, arrow-straight lines, arrow-dotted lines, triangles, parallelograms, trapezoids, rectangles, pentagons, circles, cylinders, pentagrams, semicircles, and ellipse.

Easy to Share
Enhances the experience of sharing files by scanning a code. It automatically determines the network of the device to readily share the QR code across the extranet and the intranet. QR code encryption and extraction are also featured, providing privacy and data security through the required entry of a 6-digit password for verification.

File Management
Supports managing and using Office files, image, video and audio files, and file formats such as PDF and TXT.

Similar to Real Writing Experience
The electronic whiteboard supports pen-point writing. It comes equipped with specialized pressure-sensitive writing pens, designed to enhance the writing experience. With its soft, comfortable nib, writing on the whiteboard feels natural, similar to the real writing experience.

- Displays in 4K Ultra HD and uses 4K UI.
- With its 2 built-in mid-high frequency speakers, the device supports 2.0-channel audio output, and its total power is 30 W.
- Microsoft Office and other related software can be installed, and it can play audio and video files in various formats.
- Offers a smooth writing experience through handwriting recognition, pen writing, its fast writing response speed, and pen pressure recognition.
- Support AI recognition of text and drawings.
- Seamlessly calls the camera and microphone of the whiteboard through its Type-C IN port and screen projector.

Wireless Screen Sharing
In addition to basic file sharing, the device offers wireless screen sharing, interactive operations between two screens, and reverse transmissions. It also supports screen grouping (multiple transmission), host mode (for overall permission control), real-time transmission of images, videos and audios from the wireless camera of the mobile phone to the device, and split-screen mode that displays up to 9 splits on the same screen.

Technical Specification

Built-in System

Operating System	Android 14
CPU	Quad-core A55
CPU Frequency	1.9 GHz
GPU	ARM Mali-G52 MP2 (2EE)
RAM	8 GB
ROM	64 GB
NFC	No

Function

Operating System of External Module	Windows 7/8/10/11
Wireless Access Point	YES
IR Receiver	1

LCD Panel

Screen Size	86 inch
Backlight	DLED
Aspect Ratio	16:9
Brightness	350 cd/m² (typ.)
Resolution	3840 × 2160
Viewing Angle	H: 178°; V: 178°
Lifespan	≥50, 000 hrs
Display Color	≥72% NTSC
Refresh Rate	60 Hz
Static Contrast Ratio	IPS: 1200 (typ.)
Response Time	≤8 ms (typ.)

Device Ports

Light Sensor	1
Front Button	1 × power button
Front Ports	1 × USB 2.0
Rear Port	1 × USB 3.2 Gen1 Type-A; 1 × USB 2.0 Type-A; 1 × Micro USB 2.0; 1 × DB9 male connector; 2 × HDMI 2.0 IN(4K@60 Hz); 1 × RJ-45; 1 × 3.5 mm Line out port; 1 × Touch port;1 × Type-C(USB 2.0 device + 5 W charging)
Wi-Fi	Yes, 1 × Station, 1 × AP
Wi-Fi Standard	Station: 802.11b/g/n/a/ac/ax AP: 802.11b/g/n/a/ac/ax
Wi-Fi Frequency Range	2400–2483.5 MHz, 5150–5350 MHz, 5470–5725 MHz, 5725–5850 MHz
MAX Power Transmission (Wi-Fi)	≤20 dBm@2400–2483.5 MHz; ≤23 dBm@5150–5250 MHz; ≤20 dBm@5250–5350 MHz; ≤27 dBm@5470–5725 MHz; ≤14 dBm@5725–5850 MHz
Bluetooth	Yes
Bluetooth Standard	BR/EDR/BLE, BT5.2
Bluetooth Frequency Range	2400–2483.5 MHz
MAX Power Transmission (Bluetooth)	≤20 dBm@2400–2483.5 MHz
Others	1× Touch port

Touchscreen

Touch Technology	Infrared
Attachment Method	Non-Lamination
Touch Points	Android: 32 points, Windows: 40 points
Valid Touch	2 mm (0.1") (over 90% touch area)
Writing Mode	Finger + Pen (attaches magnetically)
Touch Height	≤0.99 mm (Average)
Anti-light Interference	Anti-dazzle tempered glass
Surface Hardness	≥9H
Touch Resolution	32767 × 32767

Speaker

Frequency	150 Hz–20 kHz
Power	2.0 sound channel, front-end: 2 × 15 W
Built-in Speaker	2

General

Power Supply	100–240 VAC, 50/60 Hz
Power Consumption	182 W (basic), 340 W (max)
Operating Temperature	0 °C to +40 °C (+32 °F to +104 °F)
Storage Temperature	–20 °C to +60 °C (–4 °F to +140 °F)
Operating Humidity	10%–90% (RH), non-condensing
Storage Humidity	10%–90% (RH), non-condensing
Product Material	Metal casing
Protective Glass	3.2 mm Anti-dazzle tempered glass
Casing Color (Frame/Rear)	The left and right sides are black, and the top and bottom are starry gray
Product Dimensions	1,953.8 mm × 115.7 mm × 1,177.2 mm (76.9" × 4.6" × 46.3") (L × W × H)
Frame Size	Top border: 35.3 mm (1.4"), left and right borders: 17.5 mm (0.69"), bottom border: 40 mm (1.6")
Packaging Dimensions	2,090 mm × 227 mm × 1,315 mm (82.28" × 8.94" × 51.77") (L × W × H)
Net Weight	68 kg (149.9 lb)
Gross Weight	73.4 kg (161.8 lb)
Holes Distance	800 mm × 400 mm (31.50" × 15.75")
Installation	Wall mount; mobile bracket
Standby Power Consumption	≤0.5 W

Packing List	1 × Smart interactive whiteboard 1 × Wireless plug-in module 1 × Power cord 2 × Stylus pen 1 × Quick start guide 1 × Legal and regulatory information 1 × Wall mount bracket 1 × Accessory package 1 × Remote control

Ordering Information

Type	Model	Description
Smart interactive whiteboard	DHI-LPH86-MT410-B-S2	86 inch
Accessories (Optional)	DHI-SP-PI7C82IS	Open Pluggable Specification
	DHI-PKP-UC10A	USB Camera
	DHI-PKP-IP1A	Smart Pen
	DHI-PKP-WP1B	Wireless transmitter
	DHI-PKC-MS1A	DHI-PKC-MS1A
	DHI-PKC-MS0A	DHI-PKC-MS0A
	DHI-SP-PI5C72IS	Open Pluggable Specification
	DHI-SP-PI7C75IS	Open Pluggable Specification
	DHI-PKC-MS0C	DHI-PKC-MS0C
	DHI-SP-PI5C82IS	Open Pluggable Specification
	DHI-SP-PI5C75IS	Open Pluggable Specification
	DHI-PKC-WM1A	Omnidirectional Digital Microphone

Accessories

Optional:

DHI-PKC-MS0A

DHI-PKC-MS0A

DHI-PKC-MS0C

DHI-PKC-MS0C

DHI-PKC-MS1A

DHI-PKC-MS1A

DHI-PKC-WM1A

Omnidirectional Digital Microphone

DHI-PKP-IP1A

Smart Pen

DHI-PKP-UC10A

USB Camera

Optional:

DHI-PKP-WP1B

Wireless transmitter

DHI-SP-PI5C72IS

Open Pluggable Specification

DHI-SP-PI5C75IS

Open Pluggable Specification

DHI-SP-PI5C82IS

Open Pluggable Specification

DHI-SP-PI7C75IS

Open Pluggable Specification

DHI-SP-PI7C82IS

Open Pluggable Specification

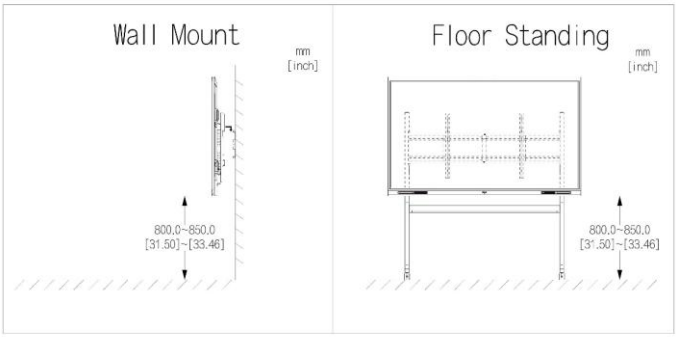

Dimensions (mm[inch])

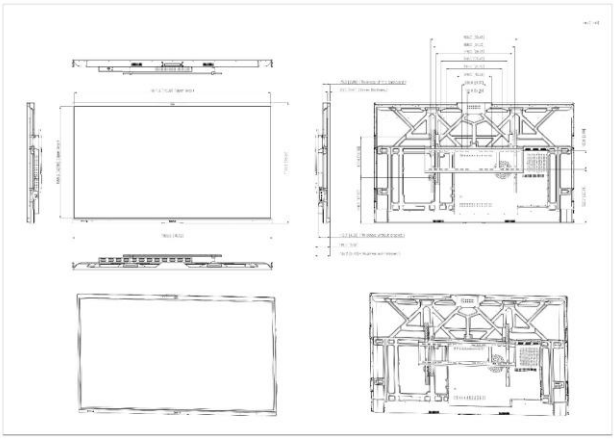

Panels

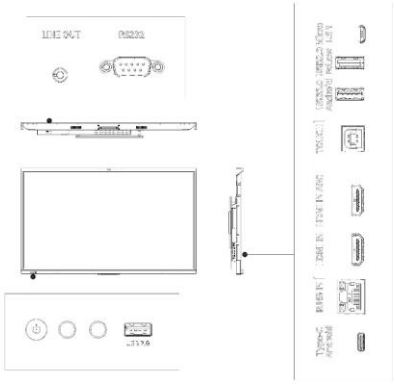

Rev 002.000 ©2025 Dahua. All rights reserved. Design and specifications are subject to change without notice.
Pictures in the document are for reference only, and the actual product shall prevail.